REV.	DESCRIPTION	ECN NO.	NAME	DATE
1	NEW FRAME	N/A	JING	2020-08-05

ALL PARTS MUST MEET TO RoHS REQUIREMENTS

1. CRIMPED FERRULE
   HEX. CRIMP SIZE .130"
2. CONTACT PIN TO SOLDER
3. PCB THICKNESS 4 MAX.

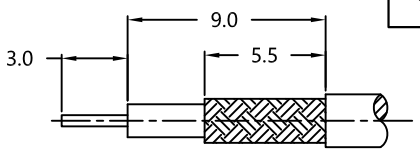

RECOMMENDED
CABLE STRIPPING DIM'S

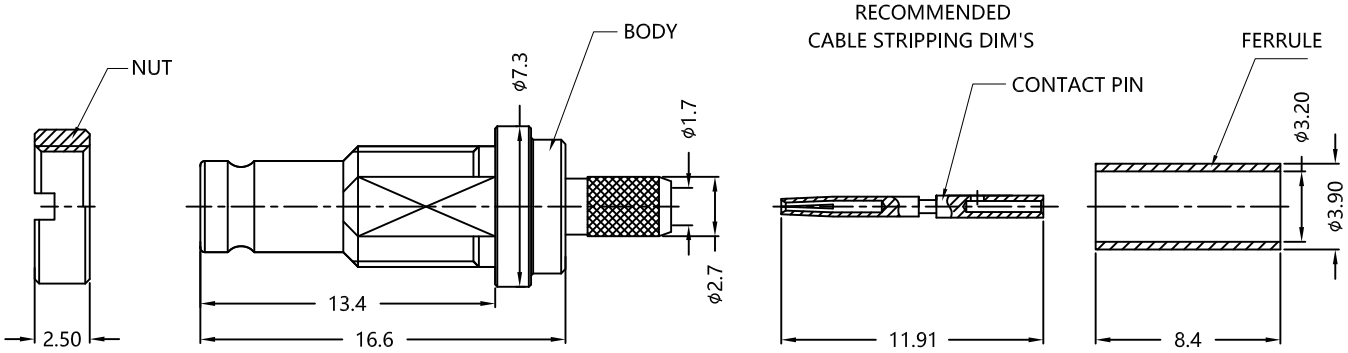

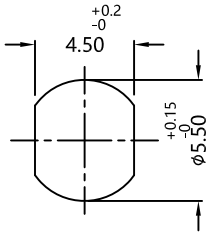

RECOMMENDED
PANEL HOLE DIM'S

MATERIALS AND PLATING UNIT: MICRO-INCHES

PART NAME	MATERIALS	PLATING
BODY	BRASS C3604	GOLD3u"/NICKEL/COPPER
INSULATOR	TEFLON MIL-P-19468	N/A
CONTACT PIN	Be-Cu C17300	GOLD10u"/NICKEL/COPPER
FERRULE	COPPER	NICKEL 100u"/COPPER
NUT	BRASS	NICKEL 100u"/COPPER

ELECTRICAL CHARACTERISTICS

IMPEDANCE		50 Ω
VOLTAGE RATING		250 V(rms)
FREQUENCY RANGE		0 ~ 4 GHz
DIELECTRIC WITHSTANDING VOLTAGE		>500 V
CONTACT RESISTANCE	CENTER CONTACT	<6.0 mΩ
	OUTER CONTACT	<3.0 mΩ
INSULATION RESISTANCE		>1000 MΩ
INSERTION LOSS		According as the cable
RF-LEAKAGE		N/A
VSWR		N/A
3RD INTERMODULATION		N/A

MECHANICAL CHARACTERISTICS

FORCE TO ENGAGE AND DISENGAGE	N/A
CENTER CONTACT RETENTION FORCE	>6 lbs
RECOMMENDED COUPLING TORQUE	N/A
COUPLING NUT RETENTION FORCE	N/A
DURABILITY	>500 cycles

ENVIRONMENTAL PARAMETER

TEMPERATURE RANGE	-55 ℃~+125 ℃

* CUSTOMER OUTLINE DRAWING

UNLESS OTHERWISE SPECIFIED:
1) EDGES : C0.15 MAX ;
2) REMOVE ALL BURRS ;
3) SURFACE ROUGHNESS : Ra1.6 ;
4) UNITS : mm ;
5) DIMENSIONS TOLERANCES
   DECIMALS : .x ±0.3 .xx ±0.2 .xxx±0.1;
   ANGLES : ± 5°.

THIRD ANGLE PROJECTION		SLK SUPERLINK
APPROVED :	CUSTOMER P/N : -	TITLE : 1.0/2.3 FEMALE S/T CRIMP FOR RG316 CABLE, 50Ω
CHECKED :	SCALE : 3 : 1	DRAWING NO. : 5A1F31S-A02-001
DRAWING : JING	DATE : 2020-08-05	
	PAGE : 1/1	COMPANY WEBSITE : www.slkcorp.com