REV.	DESCRIPTION	ECN NO.	NAME	DATE
0	FIRST EDITION	N/A	XIAO	2016-03-31
1	NEW FRAME	N/A	ZXH	2020-07-08

RoHS

ALL PARTS MUST MEET TO RoHS REQUIREMENTS

1. CRIMPED FERRULE HEX. CRIMP SIZE .130"
2. CONTACT PIN TO SOLDER

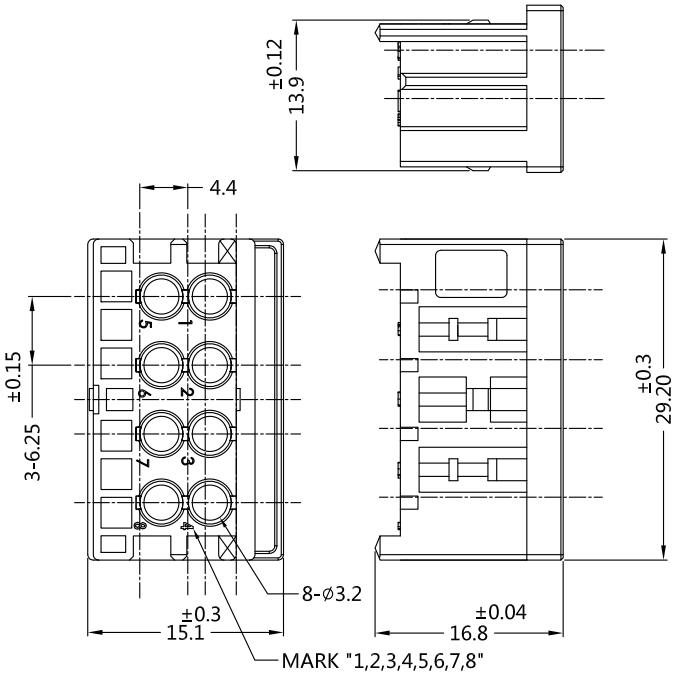

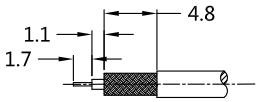

RECOMMENDED CABLE STRIPPING DIM'S

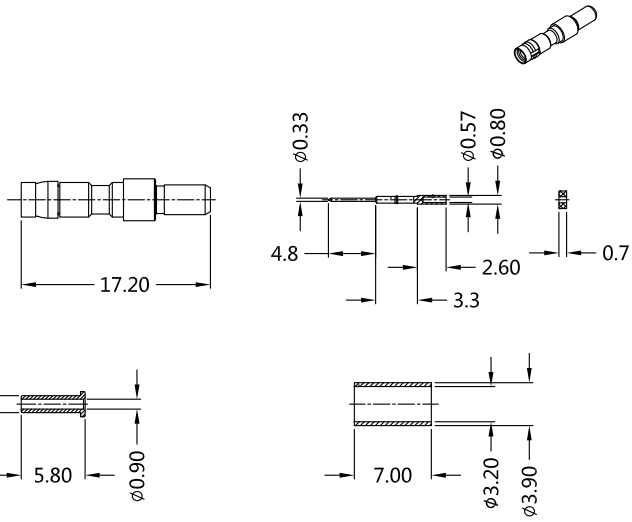

MATERIALS AND PLATING UNIT: MICRO-INCHES

PART NAME	MATERIALS	PLATING
BODY	BRASS C3604	GOLD 3u"/NICKEL/COPPER
INSULATOR	PTFE ASTM-D-1710	N/A
CONTACT PIN	BERYLLIUM COPPER	GOLD 3u"MIN./NICKEL/COPPER
BARREL	BRASS C3604	GOLD 3u"MIN./NICKEL/COPPER

ELECTRICAL CHARACTERISTICS

IMPEDANCE		50 Ω
VOLTAGE RATING		335 V(rms)
FREQUENCY RANGE		0～2.5 GHz
DIELECTRIC WITHSTANDING VOLTAGE		>1000 V
CONTACT RESISTANCE	CENTER CONTACT	<3.0 mΩ
	OUTER CONTACT	<2.0mΩ
INSULATION RESISTANCE		>5000 V
INSERTION LOSS		N/A
VSWR		<1.15@(0-10MHz)
3RD INTERMODULATION		N/A

MECHANICAL CHARACTERISTICS

FORCE TO ENGAGE AND DISENGAGE	N/A
CENTER CONTACT RETENTION FORCE	>1.0 lbs
RECOMMENDED COUPLING TORQUE	N/A
COUPLING NUT RETENTION FORCE	N/A
DURABILITY	>500cycles

ENVIRONMENTAL PARAMETER

TEMPERATURE RANGE	-65 ℃~+165 ℃

* CUSTOMER OUTLINE DRAWING

UNLESS OTHERWISE SPECIFIED:
1) EDGES : C0.15 MAX ;
2) REMOVE ALL BURRS ;
3) SURFACE ROUGHNESS : Ra1.6 ;
4) UNITS : mm ;
5) DIMENSIONS TOLERANCES
DECIMALS : .x ±0.3 .xx ±0.2 .xxx±0.1;
ANGLES : ± 5°.

THIRD ANGLE PROJECTION	
APPROVED :	CUSTOMER P/N : -
CHECKED :	SCALE : 1 : 1
DRAWING : ZXH	DATE : 2020-07-08
	PAGE : 1/1

SLK SUPERLINK

TITLE : MINI-COAX CRIMP MALE FOR RG178 CABLE 50Ω

DRAWING NO. : 5EZM11S-A03-002

COMPANY WEBSITE : www.slkcorp.com