REV.	DESCRIPTION	ECN NO.	NAME	DATE
0	FIRST EDITION	N/A	ZLX	2018-04-27
1	NEW FRAME	N/A	ZXH	2020-07-29

RoHS

ALL PARTS MUST MEET TO RoHS REQUIREMENTS

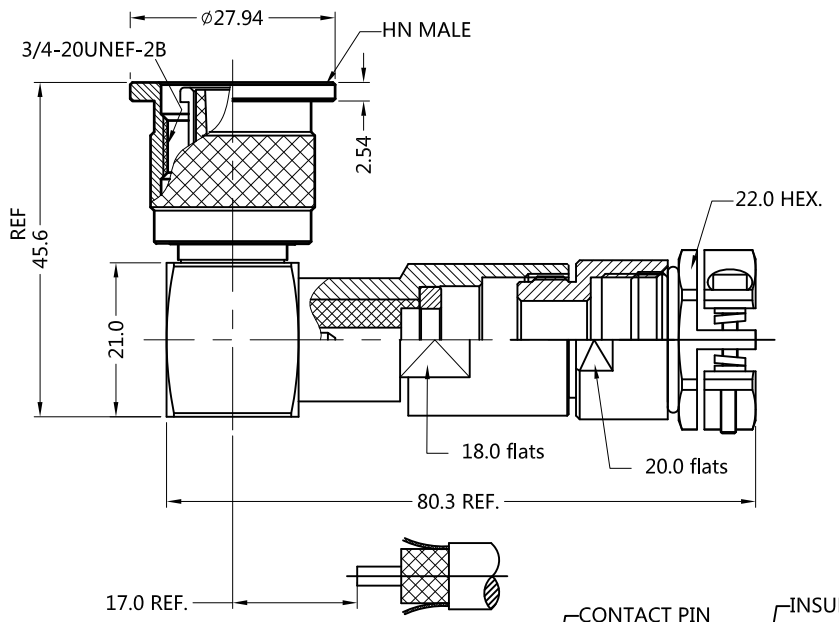

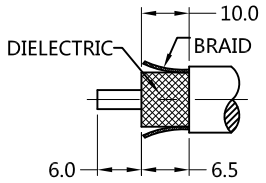

RECOMMENDED STRIPPING DIM'S

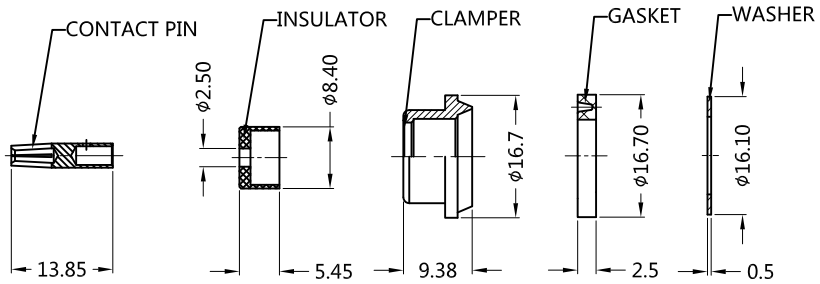

MATERIALS AND PLATING UNIT: MICRO-INCHES

PART NAME	MATERIALS	PLATING
BODY	BRASS C3604	NICKEL 200 u"/COPPER
INSULATOR	PTFE ASTM-D-1710	N/A
CONTACT PIN	BRASS C3604	SILVER 200 u"/COPPER
NUT	BRASS C3604	NICKEL 200 u"/COPPER

ELECTRICAL CHARACTERISTICS

IMPEDANCE		50 Ω
VOLTAGE RATING		N/A
FREQUENCY RANGE		0~100MHz
DIELECTRIC WITHSTANDING VOLTAGE		>1500V
CONTACT RESISTANCE	CENTER CONTACT	<1.5 mΩ
	OUTER CONTACT	<1.0 mΩ
INSULATION RESISTANCE		>5000 MΩ
INSERTION LOSS		N/A
VSWR		N/A
3RD INTERMODULATION		N/A

MECHANICAL CHARACTERISTICS

FORCE TO ENGAGE AND DISENGAGE	6 lbs MAX.
CENTER CONTACT RETENTION FORCE	6 lbs MIN.
RECOMMENDED COUPLING TORQUE	>30 in-lbs
COUPLING NUT RETENTION FORCE	>100 lbs
DURABILITY	>500cycles

ENVIRONMENTAL PARAMETER

TEMPERATURE RANGE	-40 ℃~+125 ℃
THERMAL SHOCK	US MIL- STD 202, Meth. 107,Cond. B
VIBRATION	US MIL- STD 202, Meth. 204,Cond. B
SHOCK	US MIL- STD 202, Meth. 213, Cond. I

* CUSTOMER OUTLINE DRAWING

UNLESS OTHERWISE SPECIFIED:
1) EDGES : C0.15 MAX ;
2) REMOVE ALL BURRS ;
3) SURFACE ROUGHNESS : Ra1.6 ;
4) UNITS : mm ;
5) DIMENSIONS TOLERANCES
DECIMALS : .x ±0.3 .xx ±0.2 .xxx±0.1;
ANGLES : ± 5°.

THIRD ANGLE PROJECTION

APPROVED :	CUSTOMER P/N : -
CHECKED :	SCALE : 1 : 1
DRAWING : ZXH	DATE : 2020-07-29
	PAGE : 1/1

SLK SUPERLINK

TITLE : HN MALE R/A CONNECTOR FOR RG393/RG213/RG214 CABLE 50Ω

DRAWING NO. : 5HNM14R-A253-003

COMPANY WEBSITE : www.slkcorp.com