REV.	DESCRIPTION	ECN NO.	NAME	DATE
0	FIRST EDITION	N/A	PY	2020-06-20

ALL PARTS MUST MEET TO RoHS REQUIREMENTS

1. CRIMPED FERRULE HEX. THE CRIMPED SIZE .217"
2. CONTACT PIN TO SOLDER

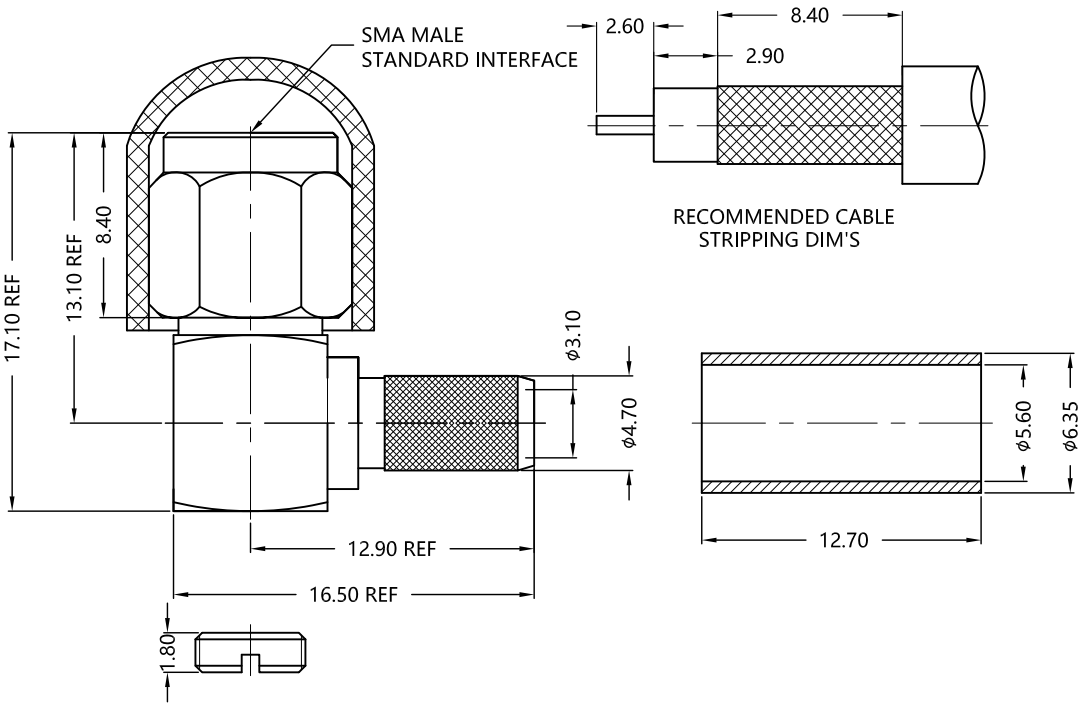

MATERIALS AND PLATING UNIT: MICRO-INCHES

PART NAME	MATERIALS	PLATING
BODY	BRASS C3604	GOLD 1.5μ "MIN / NICKEL/COPPER
INSULATOR	PTFE ASTM-D-1710	N/A
CONTACT PIN	BRASS C3604	GOLD 10μ " / NICKEL/COPPER
GASKET	SILICONE	RED
SHELL	BRASS C3604	GOLD 1.5μ "MIN / NICKEL/COPPER
RING	STAINLESS STELL 304	N/A

ELECTRICAL CHARACTERISTICS

IMPEDANCE		50 Ω
VOLTAGE RATING		335V(rms)
FREQUENCY RANGE		0 ~ 6 GHz
DIELECTRIC WITHSTANDING VOLTAGE		>500 V
CONTACT RESISTANCE	CENTER CONTACT	<3.0 mΩ
	OUTER CONTACT	<2.0mΩ
INSULATION RESISTANCE		>5000 MΩ
INSERTION LOSS		N/A
RETURN LOSS		>21 dB (0-2 GHz)
3RD INTERMODULATION		N/A

MECHANICAL CHARACTERISTICS

FORCE TO ENGAGE AND DISENGAGE	N/A
CENTER CONTACT RETENTION FORCE	>6 lbs
RECOMMENDED COUPLING TORQUE	>15 in-lbs
COUPLING NUT RETENTION FORCE	>60 lbs
DURABILITY	>500cycles

ENVIRONMENTAL PARAMETER

TEMPERATURE RANGE	-55 ℃~+125 ℃
Relative Humidity	MIL-STD-202,Method 106
Vibration	MIL-STD-202,Method 204,Cond D
Shock	MIL-STD-202,Method 213,Cond I
Corrosion	MIL-STD-202,Method 101,Cond B

* CUSTOMER OUTLINE DRAWING

UNLESS OTHERWISE SPECIFIED:
1) EDGES : C0.15 MAX ;
2) REMOVE ALL BURRS ;
3) SURFACE ROUGHNESS : Ra1.6 ;
4) UNITS : mm ;
5) DIMENSIONS TOLERANCES
DECIMALS : .x ±0.3 .xx ±0.2 .xxx±0.1;
ANGLES : ± 5°.

THIRD ANGLE PROJECTION

APPROVED :	CUSTOMER P/N : -
CHECKED :	SCALE : 1: 1
DRAWING :	DATE : 2020-06-20
	PAGE : 1/1

SLK SUPERLINK

TITLE : SMA MALE R/A FOR LMR195 CABLE,50Ω

DRAWING NO. : 5MAM11R-A45-003

COMPANY WEBSITE : www.slkcorp.com