REV.	DESCRIPTION	ECN NO.	NAME	DATE
0-1	structure changed	N/A	CLOUD	2015-03-14
2	size changed	N/A	WANG	2018-05-17
3	UPDATE DRAWING	N/A	ZLX	2018-11-26
4	UPDATE THE DRAWING FRAME	N/A	PY	2020-06-20

RoHS

ALL PARTS MUST MEET TO RoHS REQUIREMENTS

REMARK:
1. CRIMPED FERRULE HEX. CRIMP SIZE .186"
2. CONTACT PIN TO SOLDER

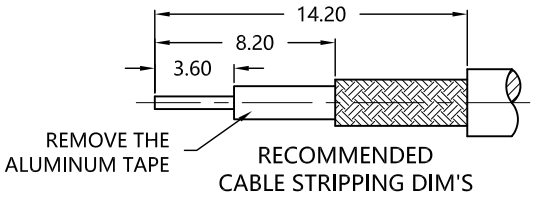

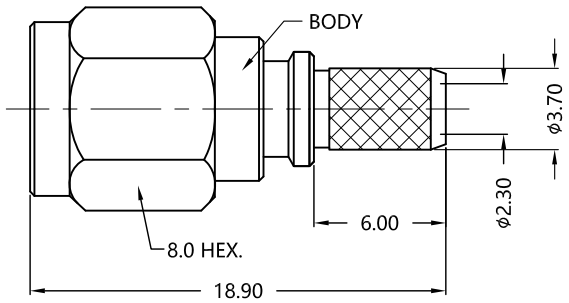

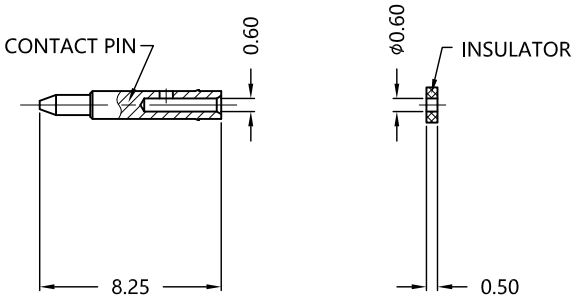

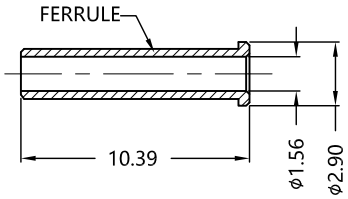

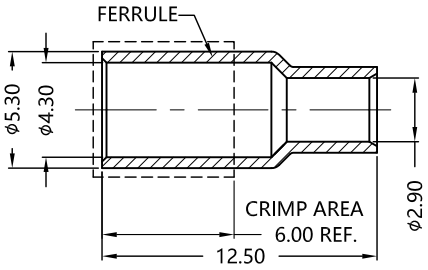

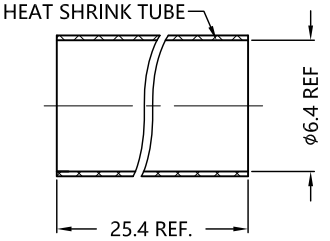

MATERIALS AND PLATING UNIT: MICRO-INCHES

PART NAME	MATERIALS	PLATING
BODY/SHELL	BRASS C3604	NICKEL 200 u''/COPPER
INSULATOR	PTFE ASTM-D-1710	N/A
CONTACT PIN	BRASS C3604	GOLD 15 u"/NICKEL/COPPER
GASKET	SILICONE	RED
FERRULE	BRASS C3604	NICKEL 200 u''/COPPER

ELECTRICAL CHARACTERISTICS

IMPEDANCE		50 Ω
VOLTAGE RATING		335 V(rms)
FREQUENCY RANGE		0 ~ 6 GHz
DIELECTRIC WITHSTANDING VOLTAGE		>500 V
CONTACT RESISTANCE	CENTER CONTACT	<3.0 mΩ
	OUTER CONTACT	<2.0mΩ
INSULATION RESISTANCE		>5000 MΩ
INSERTION LOSS		N/A
VSWR		<1.20@0-3GHz <1.30@3-6GHz
3RD INTERMODULATION		N/A

MECHANICAL CHARACTERISTICS

FORCE TO ENGAGE AND DISENGAGE	N/A
CENTER CONTACT RETENTION FORCE	N/A
RECOMMENDED COUPLING TORQUE	7~10 in.lbs
COUPLING NUT RETENTION FORCE	>60 lbs
DURABILITY	>500cycles

ENVIRONMENTAL PARAMETER

TEMPERATURE RANGE	-40 ℃~+125 ℃
THERMAL SHOCK	MIL- STD 202, Meth. 107,Cond. B
Vibration	MIL-STD-202,Method 204,Cond D
Shock	MIL-STD-202,Method 213,Cond I

* CUSTOMER OUTLINE DRAWING

UNLESS OTHERWISE SPECIFIED:
1) EDGES : C0.15 MAX ;
2) REMOVE ALL BURRS ;
3) SURFACE ROUGHNESS : Ra1.6 ;
4) UNITS : mm ;
5) DIMENSIONS TOLERANCES
DECIMALS : .x ±0.3 .xx ±0.2 .xxx±0.1;
ANGLES : ± 5°.

THIRD ANGLE PROJECTION

APPROVED :	CUSTOMER P/N : -
CHECKED :	SCALE : 1: 1
DRAWING :	DATE : 2020-06-20
	PAGE : 1/1

SLK SUPERLINK

TITLE : SMA MALE S/T FOR LMR-100A/UF CABLE,50Ω

DRAWING NO. : 5MAM11S-A02

COMPANY WEBSITE : www.slkcorp.com