REV.	DESCRIPTION	ECN NO.	NAME	DATE
1	NEW FRAME	N/A	LDH	2020-7-16

ALL PARTS MUST MEET TO RoHS REQUIREMENTS

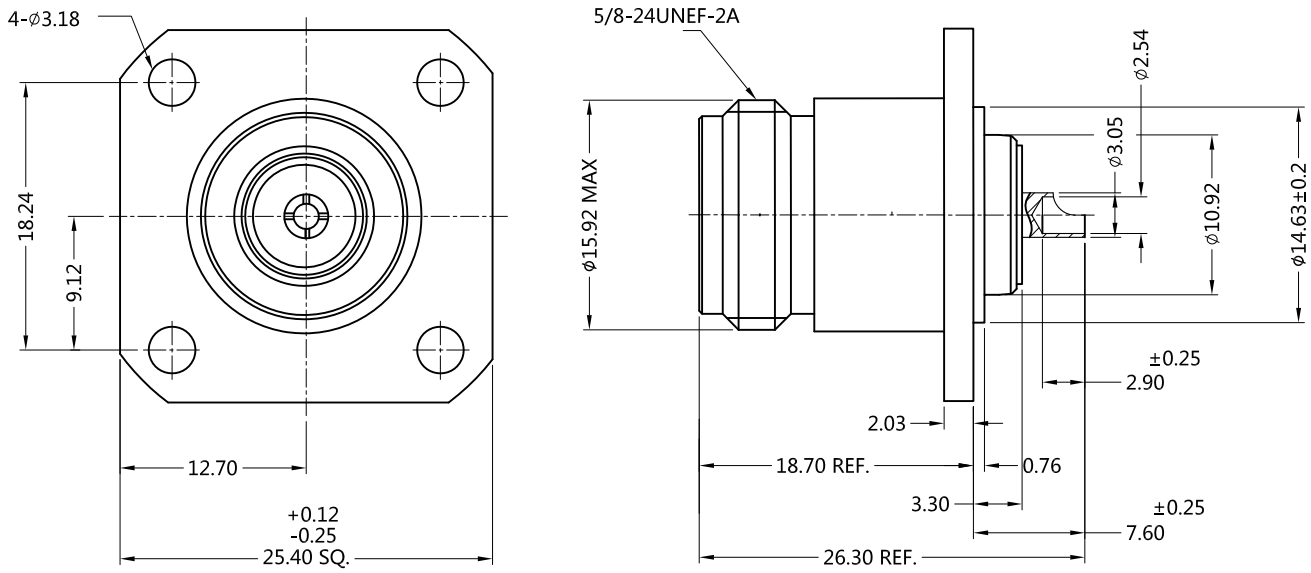

MATERIALS AND PLATING UNIT: MICRO-INCHES

PART NAME	MATERIALS	PLATING
BODY	BRASS C3604	ALBALOY120 u"/COPPER
INSULATOR	PTFE ASTM-D-1710	N/A
CONTACT PIN	BERYLLIUM COPPER	GOLD 30u"/COPPER

ELECTRICAL CHARACTERISTICS

IMPEDANCE		50 Ω
VOLTAGE RATING		1000 V(rms)
FREQUENCY RANGE		0 ~ 3 GHz
DIELECTRIC WITHSTANDING VOLTAGE		>2500 V
CONTACT RESISTANCE	CENTER CONTACT	<1.0 mΩ
	OUTER CONTACT	<0.2 mΩ
INSULATION RESISTANCE		>5000 MΩ
INSERTION LOSS		N/A
VSWR(SINGLE)		<1.30

MECHANICAL CHARACTERISTICS

RECOMMENDED COUPLING NUT TORQUE	N/A
PROOF TORQUE	N/A
COUPLING NUT RETENTION FORCE	N/A
CENTER CONTACT RETENTION FORCE	>6 lbs
DURABILITY	>500 cycles

ENVIRONMENTAL PARAMETER

TEMPERATURE RANGE	-40 ℃~+85 ℃
THERMAL SHOCK	US MIL- STD 202, METH. 107,COND. B
VIBRATION	US MIL- STD 202, METH. 204,COND. B
SHOCK	US MIL- STD 202, METH. 213,COND. I

* CUSTOMER OUTLINE DRAWING

UNLESS OTHERWISE SPECIFIED:
1) EDGES : C0.15 MAX ;
2) REMOVE ALL BURRS ;
3) SURFACE ROUGHNESS : Ra1.6 ;
4) UNITS : mm ;
5) DIMENSIONS TOLERANCES
DECIMALS : .x ±0.3 .xx ±0.2 .xxx±0.1;
ANGLES : ± 5°.

THIRD ANGLE PROJECTION

APPROVED :	CUSTOMER P/N : -
CHECKED :	SCALE : 2 : 1
DRAWING : LDH	DATE : 2020-7-20
	PAGE : 1/1

SLK SUPERLINK

TITLE : N FEMALE S/T SOLDER CUP,4-HOLE FLANGE ,50Ω

DRAWING NO. : 5NCF55S-P00-037

COMPANY WEBSITE : www.slkcorp.com