REV.	DESCRIPTION	ECN NO.	NAME	DATE
0	FIRST EDITION	N/A	JY	2013-11-25
1	NEW FRAME	N/A	JASON	2020-06-22

ALL PARTS MUST MEET TO RoHS REQUIREMENTS

REMARKS:
1.CONTACT PIN TO SOLDER.
2.CRIMP FERRULE FOR .200" HEX.

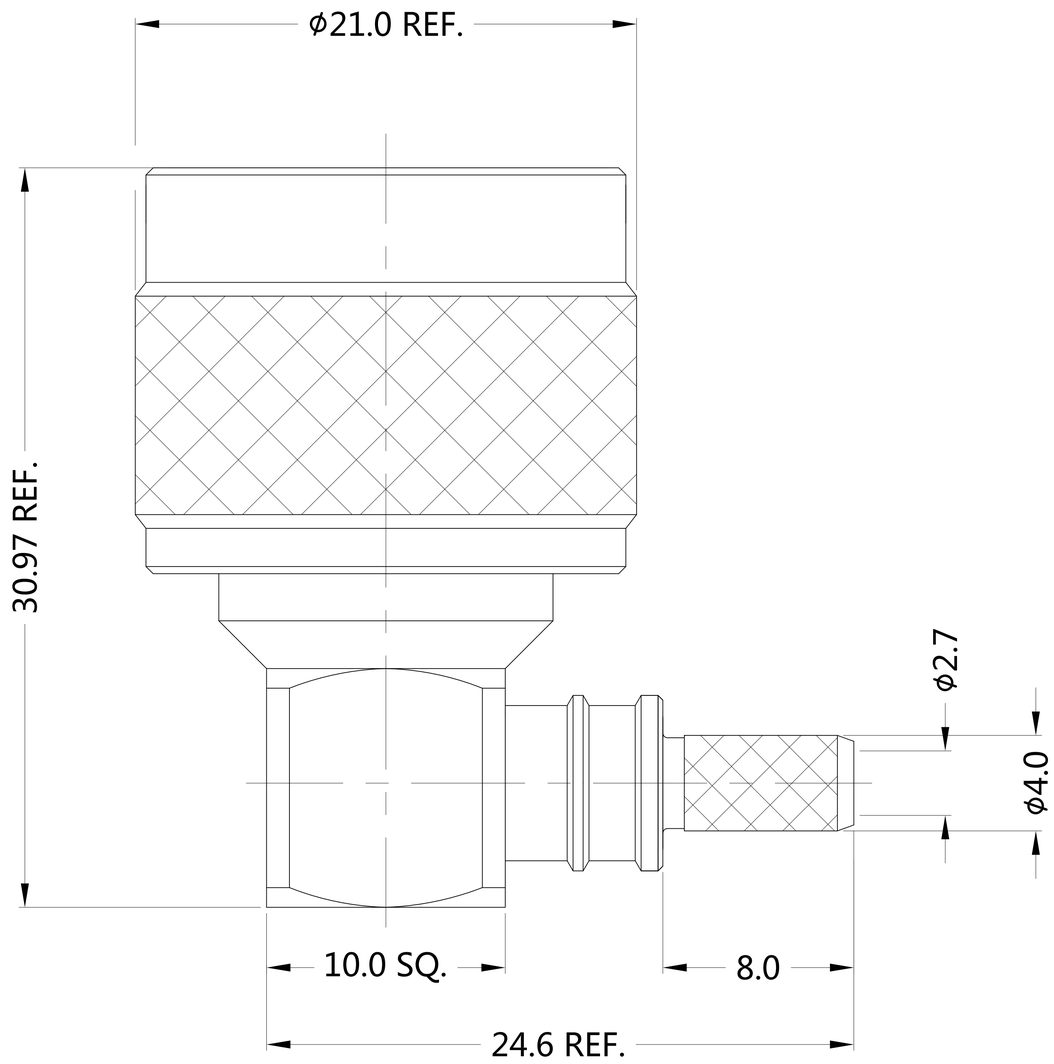

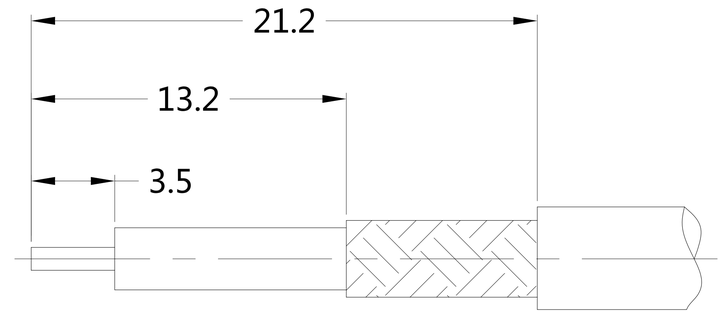

RECOMMENDED CABLE STRIPPING DIM'S

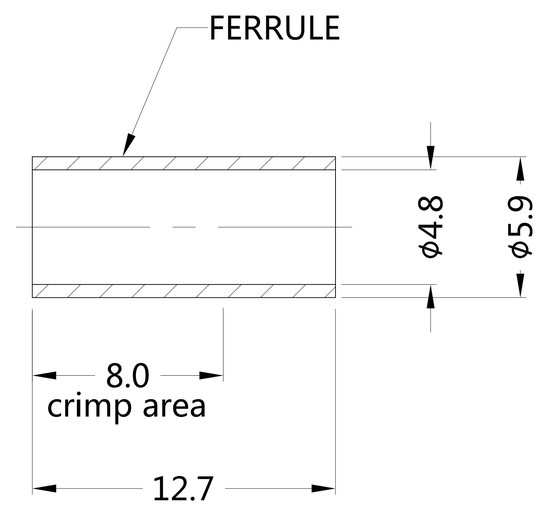

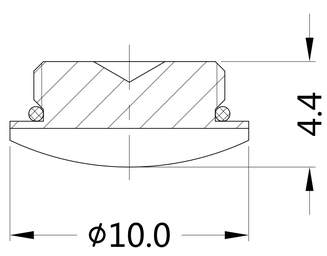

MATERIALS AND PLATING UNIT: MICRO-INCHES

PART NAME	MATERIALS	PLATING
BODY/SHELL	BRASS C3604	NICKEL 100 u"/COPPER
CONTACT PIN	BRASS C3604	GOLD 3 u"/COPPER
INSULATOR	TEFLON MIL-P-19468	N/A
FERRULE	BRASS	NICKEL 100 u"/COPPER

ELECTRICAL CHARACTERISTICS

IMPEDANCE		50 Ω
VOLTAGE RATING		750 V(rms)
FREQUENCY RANGE		DC ~ 2 GHz
DIELECTRIC WITHSTANDING VOLTAGE		>1000 V
CONTACT RESISTANCE	CENTER CONTACT	<1.0 mΩ
	OUTER CONTACT	<0.2 mΩ
INSULATION RESISTANCE		>5000 MΩ
INSERTION LOSS		ACCORDING AS THE CABLE
VSWR		<1.25

MECHANICAL CHARACTERISTICS

FORCE TO ENGAGE AND DISENGAGE	N/A
CENTER CONTACT RETENTION FORCE	> 6 lbs
RECOMMENDED COUPLING TORQUE	9~14 in.lbs
COUPLING NUT RETENTION FORCE	> 100 lbs
DURABILITY	> 500 cycles

ENVIRONMENTAL PARAMETER

TEMPERATURE RANGE	-40 ℃ ~ +105 ℃

* CUSTOMER OUTLINE DRAWING

UNLESS OTHERWISE SPECIFIED:
1) EDGES : C0.15 MAX ;
2) REMOVE ALL BURRS ;
3) SURFACE ROUGHNESS : Ra1.6 ;
4) UNITS : mm ;
5) DIMENSIONS TOLERANCES
DECIMALS : .x ±0.3 .xx ±0.2 .xxx±0.1 ;
ANGLES : ± 5°.

THIRD ANGLE PROJECTION

APPROVED :	CUSTOMER P/N : -
CHECKED :	SCALE : 1 : 1
DRAWING : JASON	DATE : 2020-06-22
	PAGE : 1/1

SLK SUPERLINK

TITLE : N MALE R/A CRIMP FOR 2.5D-HQ SUPER CABLE, 50Ω

DRAWING NO. : 5NCM11R-A395

COMPANY WEBSITE : www.slkcorp.com