REV.	DESCRIPTION	ECN NO.	NAME	DATE
A2	NEW FRAME	N/A	GUO	2020-07-04

RoHS

ALL PARTS MUST MEET TO RoHS REQUIREMENTS

REMARKS:
1.CONTACT PIN TO CRIMP HEX 0.086"X0.118"
2.OUTER CONTACT TO CLAMP

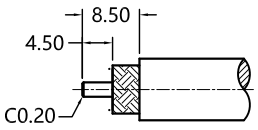

RECOMMENDED CABLE STRIPPING DIM'S

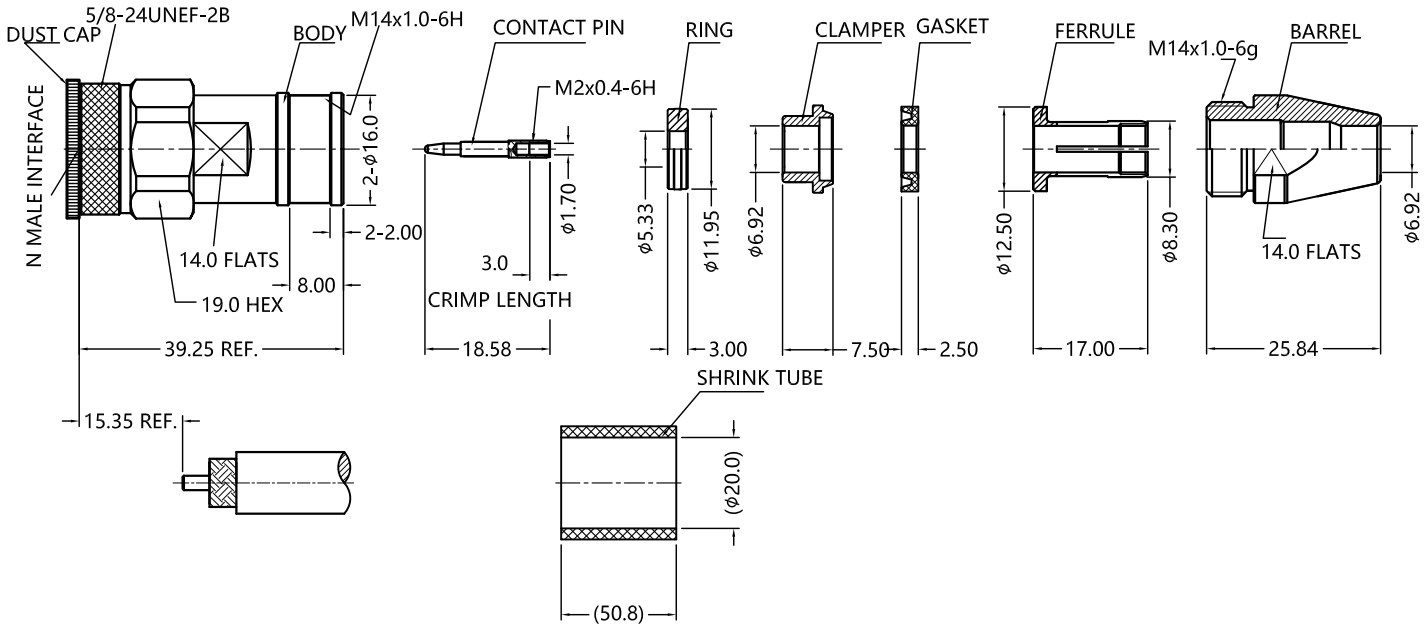

MATERIALS AND PLATING UNIT: MICRO-INCHES

PART NAME	MATERIALS	PLATING
BODY	BRASS	ALBALOY 80 u"/COPPER
INSULATOR	PTFE ASTM-D-1710	N/A
CONTACT PIN	BRASS	SILVER 200 u"/COPPER
GASKET	SILICONE	N/A
FERRULE	PHOSPHOR BRONZE	ALBALOY 80 u"/COPPER
SHELL	BRASS C3604	ALBALOY 80 u"/COPPER
RING/CLAMPER	BRASS	SILVER 200 u"/COPPER

ELECTRICAL CHARACTERISTICS

IMPEDANCE		50 Ω
VOLTAGE RATING		N/A
FREQUENCY RANGE		0 ~ 6 GHz
DIELECTRIC WITHSTANDING VOLTAGE		>1000 V
CONTACT RESISTANCE	CENTER CONTACT	<1.0 mΩ
	OUTER CONTACT	<0.2 mΩ
INSULATION RESISTANCE		>5000 MΩ
INSERTION LOSS		<0.1x$\sqrt{F(GHz)}$ dB
VSWR		<1.30
3RD INTERMODULATION		<-160dBc@900MHz&1800MHz @43dBm

MECHANICAL CHARACTERISTICS

FORCE TO ENGAGE AND DISENGAGE	N/A
CENTER CONTACT RETENTION FORCE	N/A
RECOMMENDED COUPLING TORQUE	3~5 Nm
COUPLING NUT RETENTION FORCE	>100 lbs
DURABILITY	>500 cycles

ENVIRONMENTAL PARAMETER

TEMPERATURE RANGE	-40 ℃~+125 ℃
THERMAL SHOCK	US MIL- STD 202, Meth. 107,Cond. B
VIBRATION	US MIL- STD 202, Meth. 204,Cond. B
SHOCK	US MIL- STD 202, Meth. 213,Cond. I
CLIMATIC CLASS	IEC 60068 65/165/21

* CUSTOMER OUTLINE DRAWING

UNLESS OTHERWISE SPECIFIED:
1) EDGES : C0.15 MAX ;
2) REMOVE ALL BURRS ;
3) SURFACE ROUGHNESS : Ra1.6 ;
4) UNITS : mm ;
5) DIMENSIONS TOLERANCES
DECIMALS : .x ±0.3 .xx ±0.2 .xxx±0.1;
ANGLES : ± 5°.

THIRD ANGLE PROJECTION

APPROVED :	CUSTOMER P/N :
CHECKED :	SCALE : 2: 1
DRAWING : GUO	DATE : 2020-07-04
	PAGE : 1/1

SUPERLINK

TITLE : N MALE S/T CLAMP FOR TFT401 CABLE, 50Ω

DRAWING NO. : 5NCM14S-A429

COMPANY WEBSITE : www.slkcorp.com