REV.	DESCRIPTION	ECN NO.	NAME	DATE
1	NEW FRAME	N/A	GUO	2020-07-16

ALL PARTS MUST MEET TO RoHS REQUIREMENTS

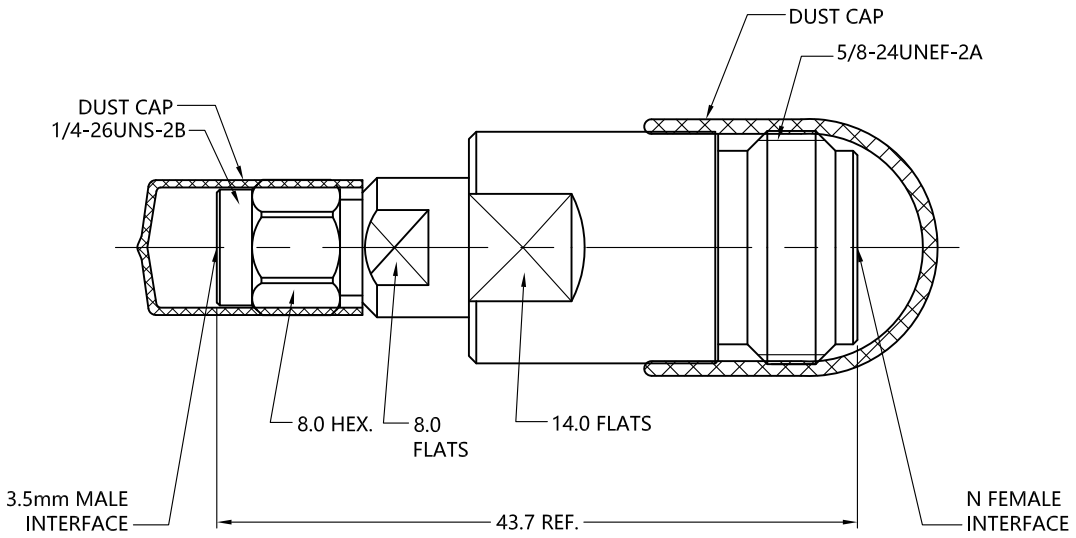

MATERIALS AND PLATING UNIT: MICRO-INCHES

PART NAME	MATERIALS	PLATING
BODY/SHELL	STAINLESS STEEL	PASSIVATION
INSULATOR	ULTEM 1000 PEI	N/A
CONTACT PIN	BE-CU C17300	GOLD PL.50 u" /COPPER
DUST CAP	PVC	N/A

ELECTRICAL CHARACTERISTICS

IMPEDANCE		50 Ω
VOLTAGE RATING		500 V(rms)
FREQUENCY RANGE		0 ~ 18 GHz
DIELECTRIC WITHSTANDING VOLTAGE		>1000 V
CONTACT RESISTANCE	CENTER CONTACT	<2.5 mΩ
	OUTER CONTACT	<0.2 mΩ
INSULATION RESISTANCE		>5000 MΩ
INSERTION LOSS		<0.05x√F(GHz) dB
VSWR		<1.05@0-6GHz <1.10@6-18GHz
3RD INTERMODULATION		N/A

MECHANICAL CHARACTERISTICS

FORCE TO ENGAGE AND DISENGAGE	N/A
CENTER CONTACT RETENTION FORCE	>10 lbs
RECOMMENDED COUPLING TORQUE	9-14 in-lbs
COUPLING NUT RETENTION FORCE	>100 lbs
DURABILITY	>500 cycles

ENVIRONMENTAL PARAMETER

TEMPERATURE RANGE	-40 ℃~+85 ℃

* CUSTOMER OUTLINE DRAWING

UNLESS OTHERWISE SPECIFIED:
1) EDGES : C0.15 MAX ;
2) REMOVE ALL BURRS ;
3) SURFACE ROUGHNESS : Ra1.6 ;
4) UNITS : mm ;
5) DIMENSIONS TOLERANCES
DECIMALS : .x ±0.3 .xx ±0.2 .xxx±0.1;
ANGLES : ± 5°.

THIRD ANGLE PROJECTION

APPROVED :	CUSTOMER P/N : -
CHECKED :	SCALE : 2:1
DRAWING : GUO	DATE : 2020-07-16
	PAGE : 1/1

SLK SUPERLINK

TITLE : 3.5mm MALE TO N FEMALE ADAPTOR ,50Ω

DRAWING NO. : 5P3M06S-NCF

COMPANY WEBSITE : www.slkcorp.com