REV.	DESCRIPTION	ECN NO.	NAME	DATE
1	UPDATE THE DRAWING	N/A	LIU	2018-12-22
2	NEW FRAME	N/A	JING	2020-08-12

ALL PARTS MUST MEET TO RoHS REQUIREMENTS

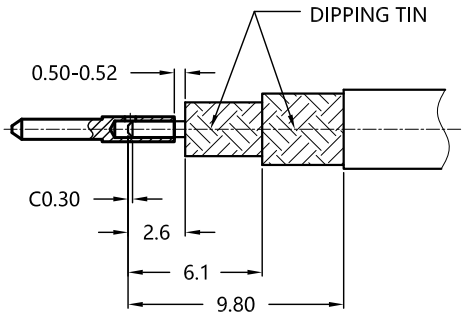

RECOMMENDED CABLE STRIPPING DIM'S

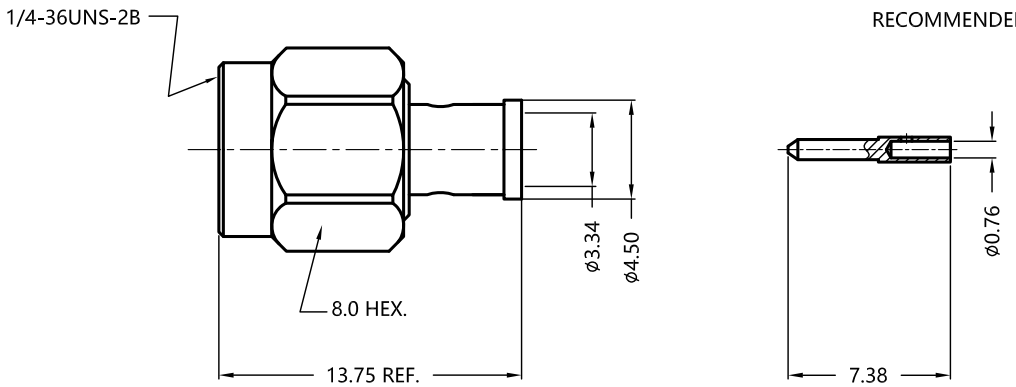

MATERIALS AND PLATING UNIT: MICRO-INCHES		
PART NAME	MATERIALS	PLATING
BODY/SHELL	BRASS C3604	GOLD 10 u"/NICKEL/COPPER
INSULATOR	PTFE ASTM-D-1710	N/A
CONTACT PIN	BRASS C3604	GOLD 30 u"/NICKEL/COPPER
GASKET	SILICONE	N/A

ELECTRICAL CHARACTERISTICS		
IMPEDANCE		50 Ω
VOLTAGE RATING		335 V(rms)
FREQUENCY RANGE		0 ~ 40 GHz
DIELECTRIC WITHSTANDING VOLTAGE		>500 V
CONTACT RESISTANCE	CENTER CONTACT	<3.0 mΩ
	OUTER CONTACT	<2.0 mΩ
INSULATION RESISTANCE		>5000 MΩ
INSERTION LOSS		According as the cable
RF-LEAKAGE		N/A
VSWR		<1.30
3RD INTERMODULATION		N/A

MECHANICAL CHARACTERISTICS	
FORCE TO ENGAGE AND DISENGAGE	N/A
CENTER CONTACT RETENTION FORCE	N/A
RECOMMENDED COUPLING TORQUE	7-10 in-lbs
COUPLING NUT RETENTION FORCE	>60 lbs
DURABILITY	>500 cycles

ENVIRONMENTAL PARAMETER	
TEMPERATURE RANGE	-55 ℃~+125 ℃

* CUSTOMER OUTLINE DRAWING

UNLESS OTHERWISE SPECIFIED:
1) EDGES : C0.15 MAX ;
2) REMOVE ALL BURRS ;
3) SURFACE ROUGHNESS : Ra1.6 ;
4) UNITS : mm ;
5) DIMENSIONS TOLERANCES
DECIMALS : .x ±0.3 .xx ±0.2 .xxx±0.1;
ANGLES : ± 5°.

THIRD ANGLE PROJECTION

APPROVED :	CUSTOMER P/N : -
CHECKED :	SCALE : 3 : 1
DRAWING : JING	DATE : 2020-08-12
	PAGE : 1/1

SLK SUPERLINK

TITLE : 2.92MM MALE S/T SOLDER FOR SLB-330-P CABLE ,50Ω

DRAWING NO. : 5P9M15S-A436-010

COMPANY WEBSITE : www.slkcorp.com