REV.	DESCRIPTION	ECN NO.	NAME	DATE
0	FIRST EDITION	N/A	PY	2020-08-31

ALL PARTS MUST MEET TO RoHS REQUIREMENTS

REMARK:
1.FERRULE T0 CRIMPED THE HEX SIZE .213"
2.THE CONTACT TO SOLDER

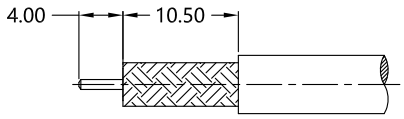

RECOMMENDED CABLE STRIPPING DIM'S

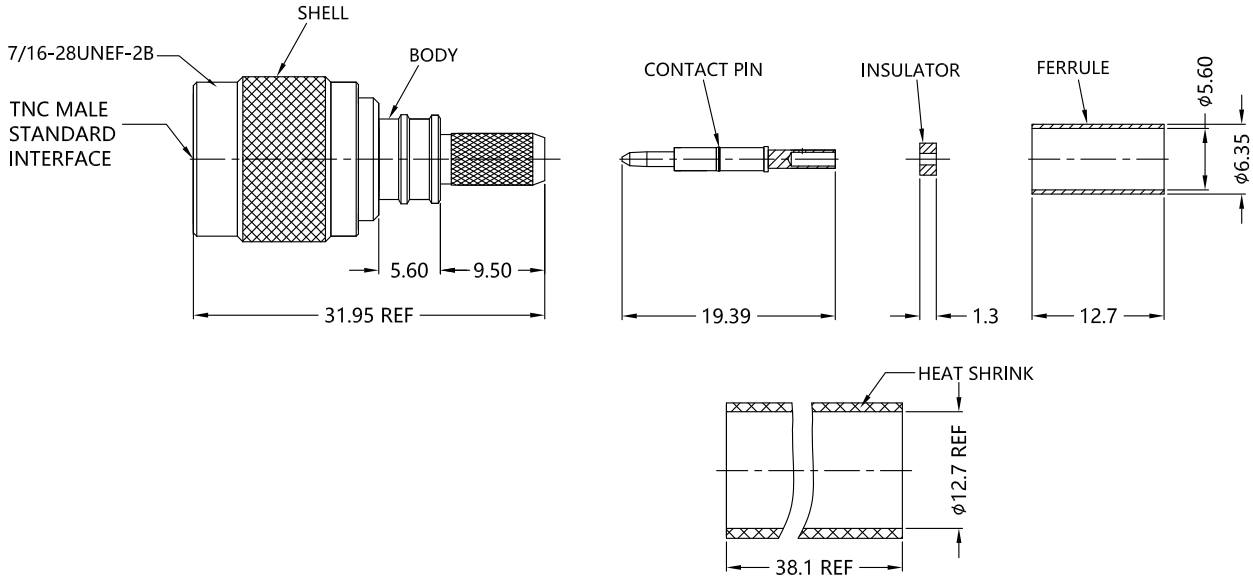

MATERIALS AND PLATING UNIT: MICRO-INCHES

PART NAME	MATERIALS	PLATING
BODY/SHELL	BRASS	ALBALOY 80 u"/COPPER
INSULATOR	TEFLON MIL-P-19468	N/A
CONTACT PIN	BRASS	PL.GOLD 5 u"MIN./NICKEL/COPPER
FERRULE	BRASS	ALBALOY 80 u"/COPPER
HEAT SHRINK	PO	BLACK

ELECTRICAL CHARACTERISTICS

IMPEDANCE		50 Ω
VOLTAGE RATING		500V(rms)
FREQUENCY RANGE		0 ~ 6 GHz
DIELECTRIC WITHSTANDING VOLTAGE		>1500 V
CONTACT RESISTANCE	CENTER CONTACT	<1.5 mΩ
	OUTER CONTACT	<0.2 mΩ
INSULATION RESISTANCE		>5000 MΩ
INSERTION LOSS		N/A
VSWR		<1.35
RF- LEAKAGE		N/A
3RD INTERMODULATION		N/A

MECHANICAL CHARACTERISTICS

FORCE TO ENGAGE AND DISENGAGE	N/A
CENTER CONTACT RETENTION FORCE	>6 lbs
RECOMMENDED COUPLING TORQUE	8-12 in.lbs
COUPLING NUT RETENTION FORCE	> 100 lbs
DURABILITY	>500cycles

ENVIRONMENTAL PARAMETER

TEMPERATURE RANGE	-55 ℃~+125 ℃
CORROSION	MIL- STD 202, Meth. 101,Cond. B
VIBRATION	MIL- STD 202, Meth. 204,Cond. B
SHOCK	MIL- STD 202, Meth. 213,Cond.G
CLIMATIC CLASS	IEC 60068 65/165/21

* CUSTOMER OUTLINE DRAWING

UNLESS OTHERWISE SPECIFIED:
1) EDGES : C0.15 MAX ;
2) REMOVE ALL BURRS ;
3) SURFACE ROUGHNESS : Ra1.6 ;
4) UNITS : mm ;
5) DIMENSIONS TOLERANCES
DECIMALS : .x ±0.3 .xx ±0.2 .xxx±0.1;
ANGLES : ± 5°.

THIRD ANGLE PROJECTION

APPROVED :	CUSTOMER P/N : -
CHECKED :	SCALE : 1: 1
DRAWING : PY	DATE : 2020-08-31
	PAGE : 1/1

SLK SUPERLINK

TITLE : TNC MALE S/T FOR RG58 CABLE,50 Ω

DRAWING NO. : 5TCM11S-A41-018

COMPANY WEBSITE : www.slkcorp.com